ShowSwitch® Company Switch

Product Selection

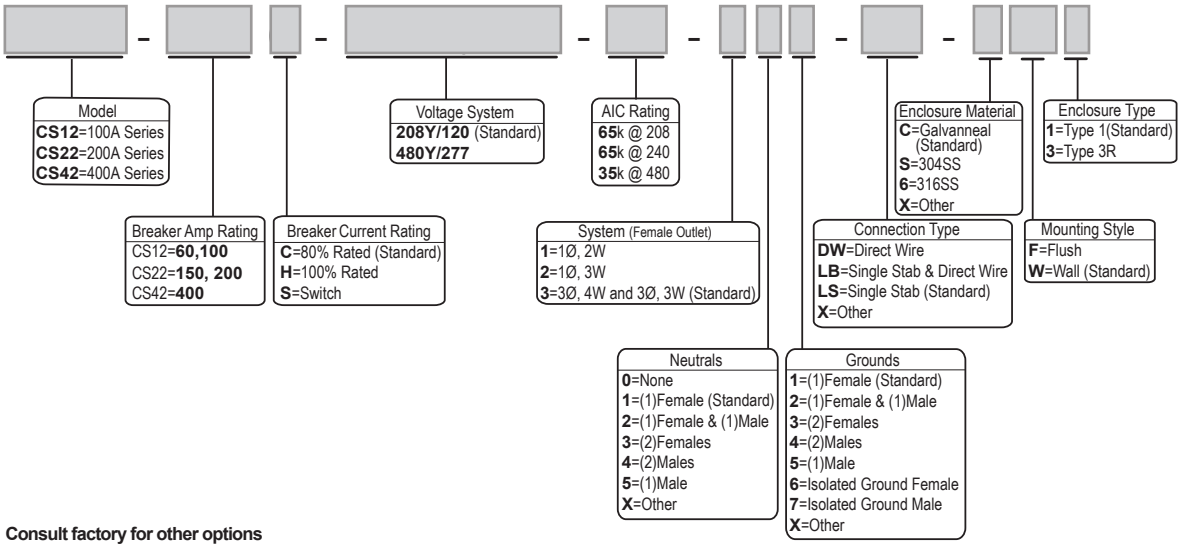

Consult factory for other options

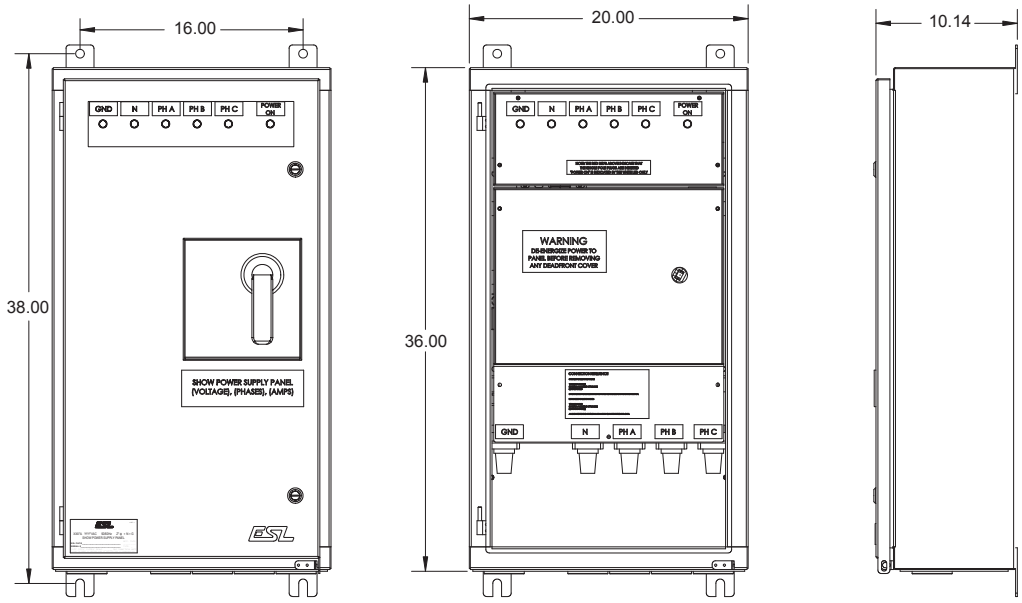

FRONT VIEW **FRONT VIEW - DOOR REMOVED** **SIDE VIEW**

Item No.	Current Rating	Voltage Rating (VAC)	Line Terminals	Neutral Terminal	Ground Terminal	Circuit Breaker Rating
3312-01	100AMP	208Y/120	#14 - 3/0	#6 - 250kcmil	#6 - 250kcmil	65kAIC @ 240VAC
3322-01	200AMP	208Y/120	3/0 - 350kcmil	#6 - 250kcmil	#6 - 250kcmil	65kAIC @ 240VAC
3342-01	400AMP	208Y/120	(2) 2/0 - 500kcmil	#2 - 600kcmil (2)	#6 - 250kcmil	65kAIC @ 240VAC

ESL Power Systems, Inc. | 2800 Palisades Dr. | Corona, CA 92880 | 800.922.4188 | +1.951.739.7000 | www.eslpwr.com | info@eslpwr.com

© 2019 ESL Power Systems, Inc. All rights reserved